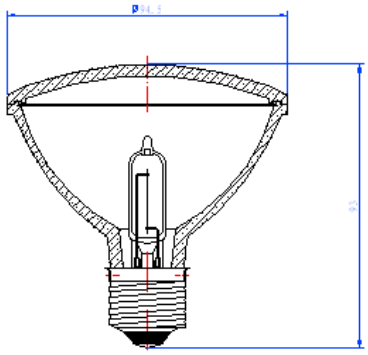

Product Type and Description:
50PAR30/HAL/120/FL
General Description:
Tungsten Halogen PAR30 Reflector Lamp
Medium Base 50Watt 120Volt Flood Beam

Product Information

Abbrev.With Packing Info.	50PAR30 HAL 120V FL 30/CS 1/SKU
Bulb	PAR30
Nominal Voltage(v)	120
Nominal Wattage(w) ±6%	50
Approx. Lumens ±10%	580
Approx.Lux	337.5
Average Rated Life (hr)	3000
Base	E26 Medium
Beam Angle±8 (deg)	28
Beam Type	FL
Color Rendering index (CRI)	99
Color Temperature/CCT(k)	2700
Diameter (in)	3.72
Diameter (mm)	94.5
Horizontal Beam Angle (deg) ±8	28
Maximum Overall Length-MOL (in)	3.661
Maximum Overall Length-MOL (mm)	93
Centerbeam Candlepower(cbcp)±25%	1350
Vertical Beam Angle (deg) ±8	28